TeamBoard Total Mobile

Shown: TMUST62EM-MK
EganMetallic MK Bundle

TeamBoard goes mobile

TeamBoard Total Mobile™ brings the interactivity of TeamBoard RT 77" 4:3[1] to almost any environment. TeamBoard Total Mobile, the world's best-designed mobile interactive whiteboard stand, allows you to integrate your TeamBoard and projector into one mobile, adjustable unit. Turn any space into an interactive learning space quickly with TeamBoard Total Mobile. And best of all, no tools or technical expertise are required to adjust the height or the location–just press a button to drop the height, and roll through any standard-size doorway–Easy does it!

With the Total Mobile, TeamBoard moves in three dimensions

Improved Accessibility

TeamBoard Total Mobile stand offers the presenter a full 26" (67cm) of height adjustment through just the touch of a finger. It adjusts quickly and smoothly to any height within its range. With finger touch operation and low noise level, the presenter can adjust the height without disrupting the flow of the interactive presentation, so you can adjust on-the-fly.

The height range improves accessibility of TeamBoard for users of all statute, and it's ADA compliant too.

Position TeamBoard anywhere in the room

Adjust the viewing angle a full 360° by simply pivoting the unit–the board, projector and laptop move with it, and stay calibrated!

Share TeamBoard across classrooms easily

Moving TeamBoard Total Mobile closer or further from an audience is a snap, with its large casters that permit easy rolling. The casters are also 'total lock' to prevent unwanted rolling and pivoting. Drop to the lowest setting and roll through a standard size doorway, your TeamBoard is now easy to relocate–ideal for shared-technology environments.

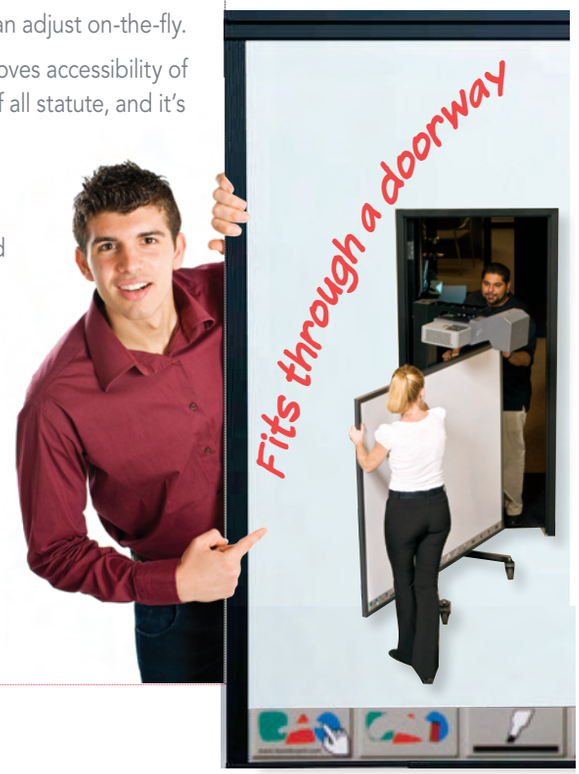

TEAM BOARD

easy™ does it.

TeamBoard Total Mobile

TMPS6250BL (Stand)

TMUST62EM-MK Stand (black), Projector (black) and TeamBoard (EganMetallic)

TMUST62CL-MK Stand (black), Projector (black) and TeamBoard (charcoal)

Also available:
TeamBoard Mobile Stand

TeamBoard UST Wallmount

Coming soon:
TeamBoard Total Wallmount

160°

EGAN Versa SURFACES

[1] TeamBoard Total Mobile is designed for use with TeamBoard RT 77" 4:3 only. Other sizes will not fit.

Features	Benefits
✔ Height Adjustable	> 26.5" (67cm) of vertical travel to accommodate presenters of all heights > At lower heights TeamBoard Total Mobile is accessible for those in early grades or wheelchairs
✔ Substantial Lockable Casters	> Easy movement from room to room with minimal rolling resistance > Change locations or heights easily without technical assistance > Casters are 'total lock'–for rock steady both rolling and swivel performance > Fits through standard doorway when projector is in lowest position
✔ Push-button Controls	> Finger touch electronic height adjustment > It's infinitely adjustable–choose any height within the range without compromise
✔ Quiet Operation	> Low and uniform noise level means zero interruption height adjustment > Easy to maintain normal speaking voice while adjusting height
✔ Adjusts Quickly	> Height adjustment speed of 1.7"/second (43mm/sec)–can be raised to full height from minimum in only 45 seconds
✔ Maximum Height 8' 10"	> TeamBoard Mobile Total Mobile Stand has a trip switch – if you have a low clearance ceiling, and overextend the tower, the trip switch will cut the power until reset > At its uppermost position, with the projector installed, overall height is 8' 10" (2.7m)
✔ Minimum Height 6' 7"	> In its lowest position, with projector installed, overall clearance of 6' 7" (2m) is all that's required

easy™ does it.

- Easy to use
- Infinitely adjustable within its range
- Move it anywhere you need it
- Fits through standard doorway

Design Intent

The TeamBoard Total Mobile maintains calibration even while being rolled from room to room. Rugged construction with finger touch height adjustability.

Operating Specifications

Functionalities	Mobility–can easily be rolled room to room Finger touch height adjustability Projector integration Stable, robust construction
Certifications & Compliances	EN 60335-1, UL962, ADA
Projector Compatibility	Sanyo Ultra-Short-Throw projectors (sold separately or bundled, please specify)
Power Requirements	110V or 230V–please specify for your country
Duty Cycle	10%, or 6 minutes/hour
Warranty	1-year mechanical and 5-year limited warranty

Dimensional Details

Overall width	Stand only	33″ (0.8m)
	Stand w/laptop arm	49″ (1.3m)
	Max; TeamBoard RT 77″ 4:3	73 1/8″ (1.9m)
	Min; (laptop positioned behind board) (laptop rotated out)	 62 5/8″ (1.6m) 73 1/8″ (1.9m)
Overall height	Max; no projector Max; with projector	8′ 6 5/8″ (2.6m) 8′ 9 1/2″ (2.7m)
	Min; no projector Min; with projector	6′ 4 1/8″ (1.93m) 6′ 7″ (2m)
Overall depth	Without projector	28″ (0.7m)
	With Sanyo projector	~ 35″ varies
Net Weight	Without projector	124 lbs. (56kg)
	Sanyo XL50 projector only	16.7 lbs. (7.6kg)
Operating Environment	41° F to 104°F (+5°C to +40°C)	

Shipping

Stand only	Dimensions	36″ x 48″ x 6″ (92cm x 122cm x 15cm)
	Gross Shipping Weight	130 lbs. (59kg)

No Hassle:

If you have any problems, pick up the phone and let us know. We expect, and need, our customers to be delighted with our products and services.

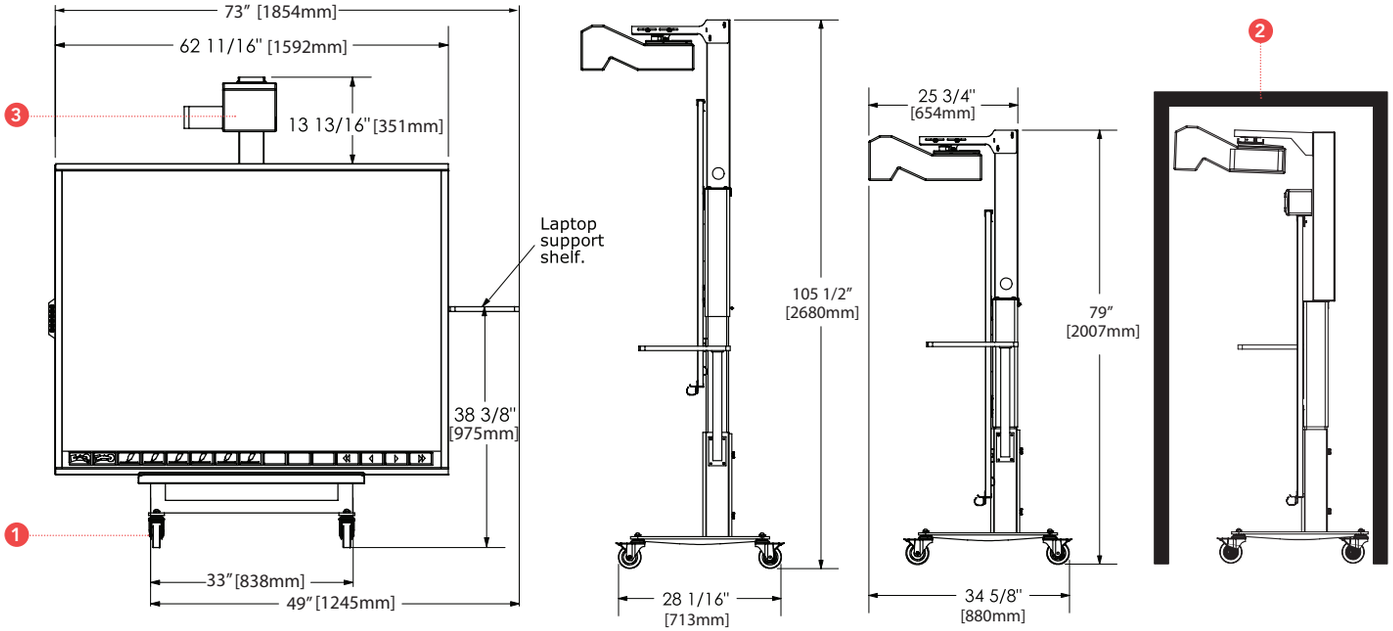

1 **Mobile**–large 'total lock' casters means easy rolling from room-to-room and placement or pivoting inside a room, without unwanted movement

2 **Finger touch height adjustment** with 26.5" range means improved accessibility and permits rolling through a standard doorway

3 **Integrated projector** means less shadowing, the presenter is out of the glare and projector-board calibration is maintained when adjusting height and/or location

What's in the box...

TeamBoard Total Mobile Stand ships with:

- Your new stand, knocked down (dealer assembled)
- Allen key hex tool
- Instruction sheet
- Safety brackets
- Laptop arm and tray
- Mounting hardware to install TeamBoard RT 77" 4:3

* One 9/16" open-end wrench (required for initial assembly only) not included

TeamBoard Total Mobile Bundle ships with:

- TeamBoard RT 77" 4:3 (1)
- TeamBoard Total Mobile Stand
- Sanyo XL51 Ultra Short Throw projector

Dealer Stamp Here

Designed and manufactured in North America by **Egan Teamboard Inc.**, leaders in the Interactive Whiteboard marketplace for 15 years. TeamBoard is part of the Egan Visual family, designers and manufacturers of visual communication products for over 40 years. You can count on TeamBoard products to be well-designed and well-built for years of hassle-free enjoyment.

Egan TeamBoard, Inc.
International
Tel +1-905-851-2826
Fax +1-905-851-3426

Egan TeamBoard, Inc.
US Eastern / Central States & Canada
Tel +1-905-851-2826 1-800-263-2387
Fax 1-888-609-8886

Egan TeamBoard, Inc.
US Mountain and Western States
Tel +1-323-720-1336 1-800-826-1778
Fax 1-800-726-1314

www.teamboard.com

© Egan Visual Inc., 2009 All rights reserved. All other product names are trademarks of their respective owners. Specifications are nominal and believed to be accurate at the time of publication. All information contained herein is subject to change without notice. TBTMS_08/09